Current part is item (2) on diagram. Available at www.oshkoshequipment.com

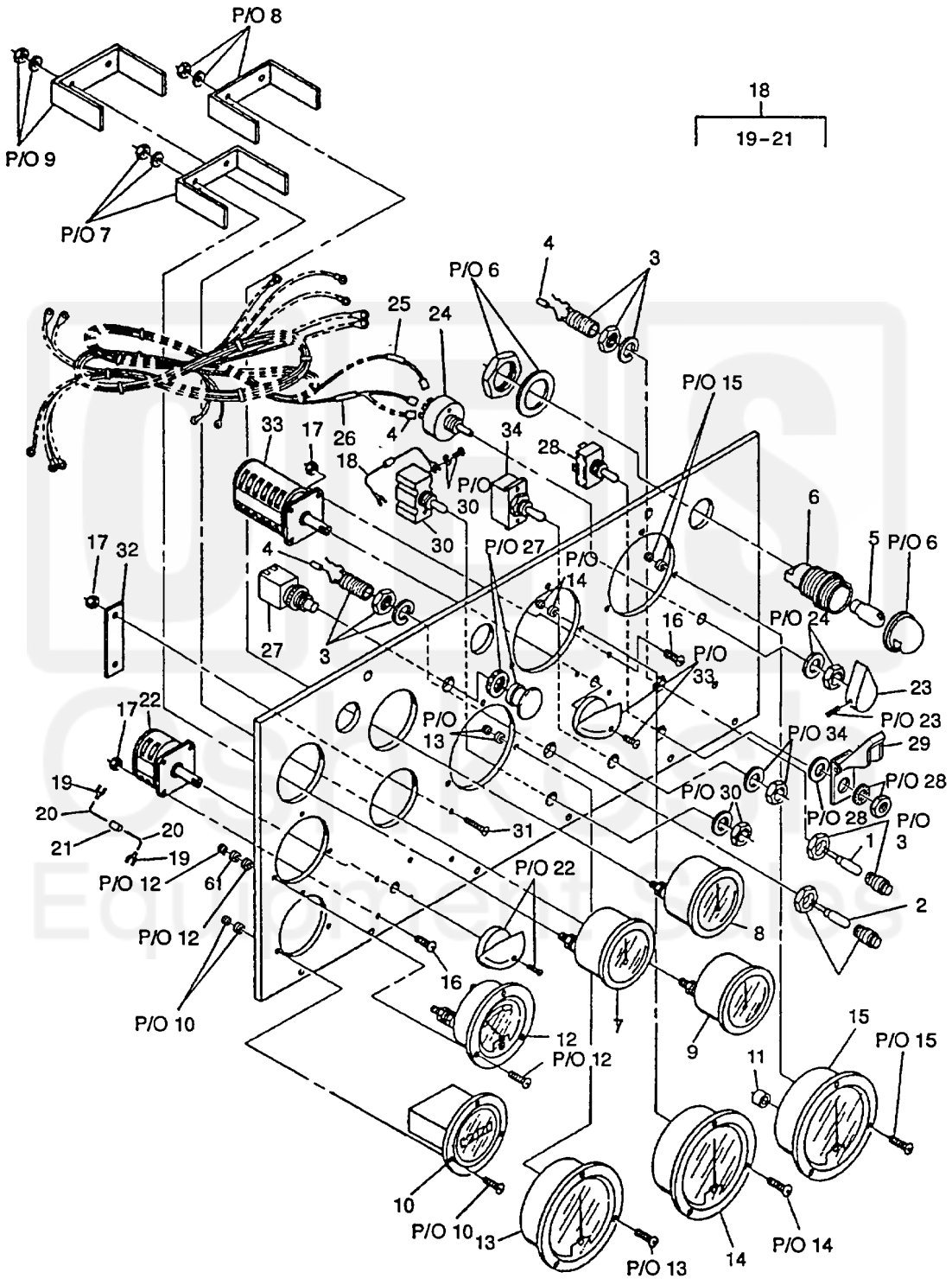

Figure 10. Control Panel and Box Assembly (Sheet 1 of 2)

Current part is item (2) on diagram. Available at www.oshkoshequipment.com

Current part is item (2) on diagram. Available at www.oshkoshequipment.com

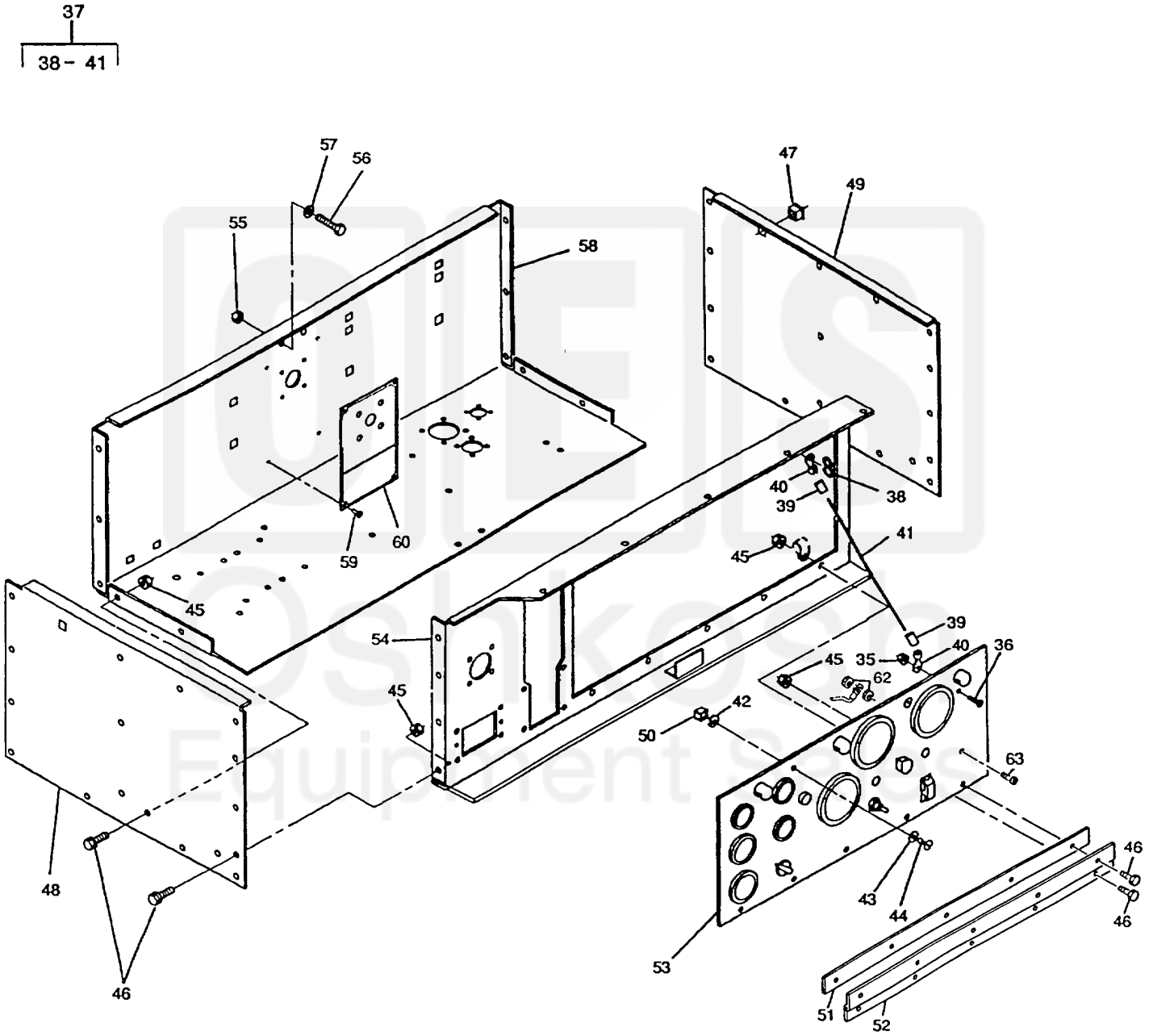

Figure 10. Control Panel and Box Assembly (Sheet 2 of 2)

Current part is item (2) on diagram. Available at www.oshkoshequipment.com

Current part is item (2) on diagram. Available at www.oshkoshequipment.com

(1)	(2) SMR CODE				(3)	(4)	(5)	(6)	(7)
	a.	b.	c.	d.					USMC
ITEM NO	ARMY	AIR FORCE	NAVY	USMC	FSCM	PART NUMBER	DESCRIPTION AND USABLE ON CODE (UOC)	QTY	QTY PER EQUIP
							GROUP 03 - CONTROL BOX ASSEMBLY FIG. 10 CONTROL PANEL AND BOX ASSEMBLY		
1	PAOZZ	PAOZZ		PAOZZ	83330	521-9208	..LIGHT EMITTING DIOD YELLOW	1	1
2	PAOZZ	PAOZZ		PAOZZ	80063	A3029220-1	..LIGHT EMITTING DIOD GREEN	1	1
3	PAOZZ	PAOZZ		PAOZZ	96906	MS25041-5	..LIGHT, INDICATOR	2	2
4	MFFZZ	MOO		MFFZZ	30554	88-20032-77	..INSULATION, SLEEVING MAKE FROM P/N M23053/5-105-0 (81349), AS REQUIRED	7	7
5	PBOZZ	PBOZZ		PBOZZ	71744	6S6-30V	..LAMP, INCANDESCENT	3	3
6	PAOZZ	PAOZZ		PAOZZ	83330	47-0901-2900-201	..LIGHT, PANEL	3	3
7	PAOZZ	PAOZZ		PAOZZ	06555	88-21103	..METER, SPECIAL SCALE	1	1
8	PAOZZ	PAOZZ		PAOZZ	06555	940107	..INDICATOR, TEMPERATU	1	1
9	PAOZZ	PAOZZ		PAOZZ	06555	940109	..GAGE, PRESSURE, DIAL	1	1
10	PAOZZ	PAOZZ		PAOZZ	13555	99023N	..METER, TIME TOTALIZI	1	1
11	XDOZZ	XB		XBOZZ	99017	SC-1/4-4	..CAP, SLEEVE	2	2
12	PAOZZ	PAOZZ		PAOZZ	30554	69-574	..AMMETER	1	1
13	PAOZZ	PAOZZ		PAOZZ	30554	72-5016	..METER, ELECTRICAL FR UOC: ENZ	1	1
13	PAOZZ	PAOZZ		PAOZZ	77221	638-18049	..METER, ELECTRICAL FR UOC: EMJ	1	1
14	PAOZZ	PAOZZ		PAOZZ	30554	72-5007-1	..AMMETER UOC: EMJ	1	1
14	PAOZZ	PAOZZ		PAOZZ	30554	72-5007-2	..METER, ELECTRICAL FR UOC: ENZ	1	1
15	PAOZZ	PAOZZ		PAOZZ	30554	72-5008	..VOLTMETER	1	1
16	PAOZZ	PAOZZ		PAOZZ	73734	3145	..SCREW, MACHINE	8	8
17	PAOZZ	PAOZZ		PAOZZ	83385	841-6-32	..NUT, PLAIN, ASSEMBLED	10	42
18	AOOOO	AOO		AOOOO	30554	88-22418-1	..SEMICONDUCTOR DEVIC	2	3
19	PAOZZ	PAOZZ		PAOZZ	00779	52949	...TERMINAL, LUG #6	2	257
20	MOOZZ	MOO		MOOZZ	30554	88-22418-2	...INSULATION, SLEEVING MAKE FROM P/N M23053/5-104-0 (81349) AS REQUIRED	2	4
21	PAOZZ	PAOZZ		PAOZZ	80131	1N5406	...SEMICONDUCTOR DEVIC	1	2
22	PAOZZ	PAOZZ		PAOZZ	30554	88-21160	..SWITCH, ROTARY	1	1
23	PAOZZ	PAOZZ		PAOZZ	96906	MS91528-2K2B	..KNOB	1	1
24	PAOZZ	PAOZZ		PAOZZ	81349	RV4NAYSD502A	..RESISTOR, VARIABLE, N	1	1
25	MFFZZ	MOO		MFFZZ	30554	88-22629-002	..MARKER, ID, WIRE NUMBER 156A20, MAKE FROM P/N M23053/5-105- 9 (81349), 1.25 INCHES REQUIRED	1	1

Current part is item (2) on diagram. Available at www.oshkoshequipment.com

Current part is item (2) on diagram. Available at www.oshkoshequipment.com

(1)	(2) SMR CODE				(3)	(4)	(5)	(6)	(7)
ITEM NO	a. ARMY	b. AIR FORCE	c. NAVY	d. USMC	FSCM	PART NUMBER	DESCRIPTION AND USABLE ON CODE (UOC)	QTY	USMC QTY PER EQUIP
26	MFFZZ	MOO	MFFZZ	30554	88-22629-003		..MARKER, ID, WIRE NUMBER 157B20, MAKE FROM P/N M23053/5-105-9 (81349), 1 25 INCHES REQUIRED	1	2
27	PAOZZ	PAOZZ		PAOZZ	60886	AYW401-R	..SWITCH, PUSH-PULL	1	1
28	PAOZZ	PAOZZ		PAOZZ	81640	8906K4533	..SWITCH, TOGGLE BATTLE SHORT	1	1
29	PAOZZ	PAOZZ		PAOZZ	96906	MS25224-1	..GUARD, SWITCH	1	1
30	PAOZZ	PAOZZ		PAOZZ	81640	8906K4519	..SWITCH, TOGGLE AC CIRCUIT INTERRUPTER	1	1
31	PAOZZ	PAOZZ		PAOZZ	96906	MS35198-29	..SCREW, MACHINE FLAT COUNTERSUNK HD, BRASS (GROUND SCREW)	2	2
32	XDOZZ	XB		XBOZZ	9R803	3000-6-XP-74	..MARKER STRIP, TERMI	1	1
33	PAOZZ	PAOZZ		PAOZZ	10983	88-21902	..SWITCH, ROTARY	1	1
34	PAOZZ	PAOZZ		PAOZZ	81640	88-22141	..SWITCH, TOGGLE	1	1
35	PAOZZ	PAOZZ		PAOZZ	78189	511-081800-00	..NUT, PLAIN, ASSEMBLED	1	11
36	PAOZZ	PAOZZ		PAOZZ	96906	MS35198-42	..SCREW, MACHINE	1	1
37	AOOOO	AOO		AOOOO	30554	88-20134	..HOLDER, METER PANEL	1	1
38	PAOZZ	PAOZZ		PAOZZ	96906	MS87006-13	...HOOK, CHAIN, S	1	6
39	MOOZZ	MOO		MOOZZ	30554	88-20134-4	...INSULATION, SLEEVING MAKE FROM P/N M23053/5-108-0 (81349), AS REQUIRED.	1	1
40	PAOZZ	PAOZZ		PAOZZ	96906	MS20659-144	...TERMINAL, LUG	2	3
41	MOOZZ	MOO		MOOZZ	30554	88-20134-2	...ROPE, FIBROUS BMU 10 41 MAKE FROM P/N 1-4 INDIA (72205), 1.04 FT REQUIRED	1	1
42	PAOZZ	PAOZZ		PAOZZ	94222	85-34-101-20	..WASHER, SPLIT	2	2
43	PAOZZ	PAOZZ		PAOZZ	94222	85-46-103-39	..WASHER, FLAT	2	2
44	PAOZZ	PAOZZ		PAOZZ	94222	85-12-460-16	..STUD, TURNLOCK FASTE	2	2
45	PAOZZ	PAOZZ		PAOZZ	81205	2740-0003	..NUT, PLAIN, ASSEMBLED	28	362
46	PAOZZ	PAOZZ		PAOZZ	19207	12325869	..BOLT, MACHINE	28	293
47	PBOZZ	PBOZZ		PBOZZ	78553	C7941-1032-3B	..NUT, PLAIN, SQUARE	2	19
48	XDOZZ	XB		XBOZZ	30554	88-20204	..PANEL, CONTROL BOX LEFT SIDE	1	1
49	XDOZZ	XB		XBOZZ	30554	88-20205	..PANEL, CONTROL BOX RIGHT SIDE	1	1
50	PBOZZ	PBOZZ		PBOZZ	94222	85-35-309-56	..RECEPTACLE, TURNLOCK	2	2
51	XDOZZ	XB		XBOZZ	30554	88-20514	..SPACER, HINGE	1	1
52	MOOZZ	MOO		MOOZZ	30554	88-20000	..HINGE, CONTROL PANE MAKE FROM P/N A703 (7B735) 1 50 INCHES X 20 90 INCHES REQUIRED	1	1
53	XDOZZ	XB		XBOZZ	30554	88-22044	..CONTROL PANEL	1	1

Current part is item (2) on diagram. Available at www.oshkoshequipment.com

Current part is item (2) on diagram. Available at www.oshkoshequipment.com

(1)	(2) SMR CODE				(3)	(4)	(5)	(6)	(7)
	a.	b.	c.	d.					USMC QTY
ITEM NO	ARMY	AIR FORCE	NAVY	USMC	FSCM	PART NUMBER	DESCRIPTION AND USABLE ON CODE (UOC)	QTY	PER EQUIP
54	XDFZZ	XB		XBFZZ	30554	88-20199	..PANEL, CONTROL BOX	1	1
55	PAOZZ	PAOZZ		PAOZZ	30554	88-22790-1	..NUT, PLAIN, HEXAGON	2	93
56	PAOZZ	PAOZZ		PAOZZ	80204	B1821BH025C100N	..SCREW, CAP, HEXAGON H	2	2
57	PAOZZ	PAOZZ		PAOZZ	96906	MS51412-4	..WASHER, FLAT	2	86
58	XDFZZ	XB		XBFZZ	30554	88-20200	..PANEL, CONTROL BOX	I	1
59	PAOZZ	PAOZZ		PAOZZ	81349	M24243/1A402	..RIVET, BLIND	4	67
60	MDOZZ	MDO		MDOZZ	30554	88-20153	..PLATE, IDENTIFICATIO RECONNECTION SWITCH	1	1
61	PAOZZ	PAOZZ		PAOZZ	96906	MS51412-20	..WASHER, FLAT	3	8
62	PAOZZ	PAOZZ		PAOZZ	78189	511-001800-00	.NUT, CAPTIVE 8-32	2	2
63	PAOZZ	PAOZZ		PAOZZ	96906	MS35198-46	.SCREW, MACHINE, FLAT 8-32 X 1.00	1	1

END OF FIGURE

Current part is item (2) on diagram. Available at www.oshkoshequipment.com